3w C ree□□□□□□□□A□□□□

□□□

& 3w C-ree□□□
&□□/□□□□/□□□3□□□□□□□□
&□□□□

□□□□□□

□□□□□□10-30 DC
□□□□□IP 67
□□□□□6000K
□□□□□□□PC
□□□□□□□□□□□□□□□□□□□
□□□□□□□□□□□Alu□□□□□□□
□□□□□□□□□□□□□/□□□□/□□□□□□
□□□□□□30000□□□□□

UNIONLUX

□□□□□□□□

UNIONLUX

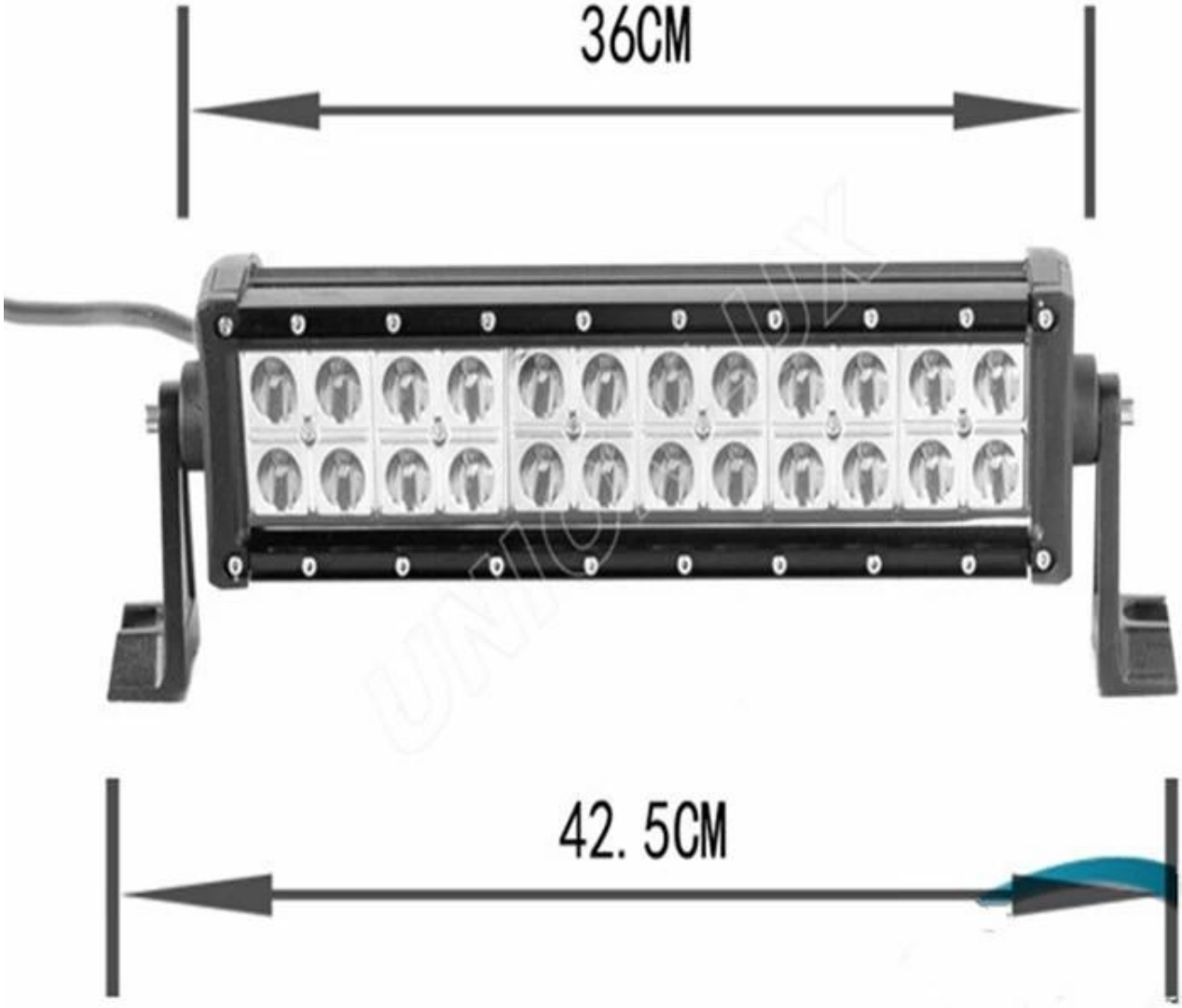

UNIONLUX

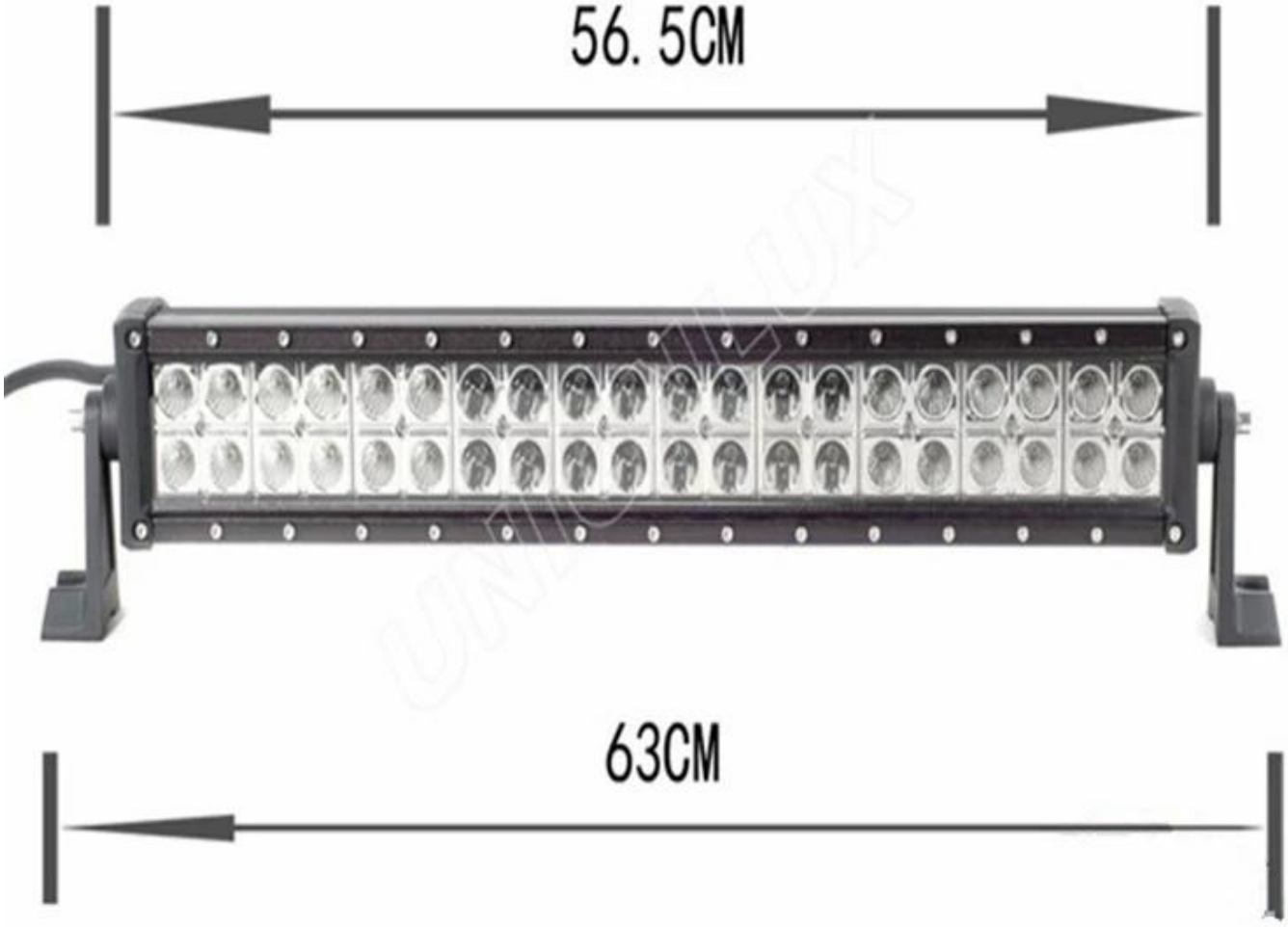

UNIONLUX

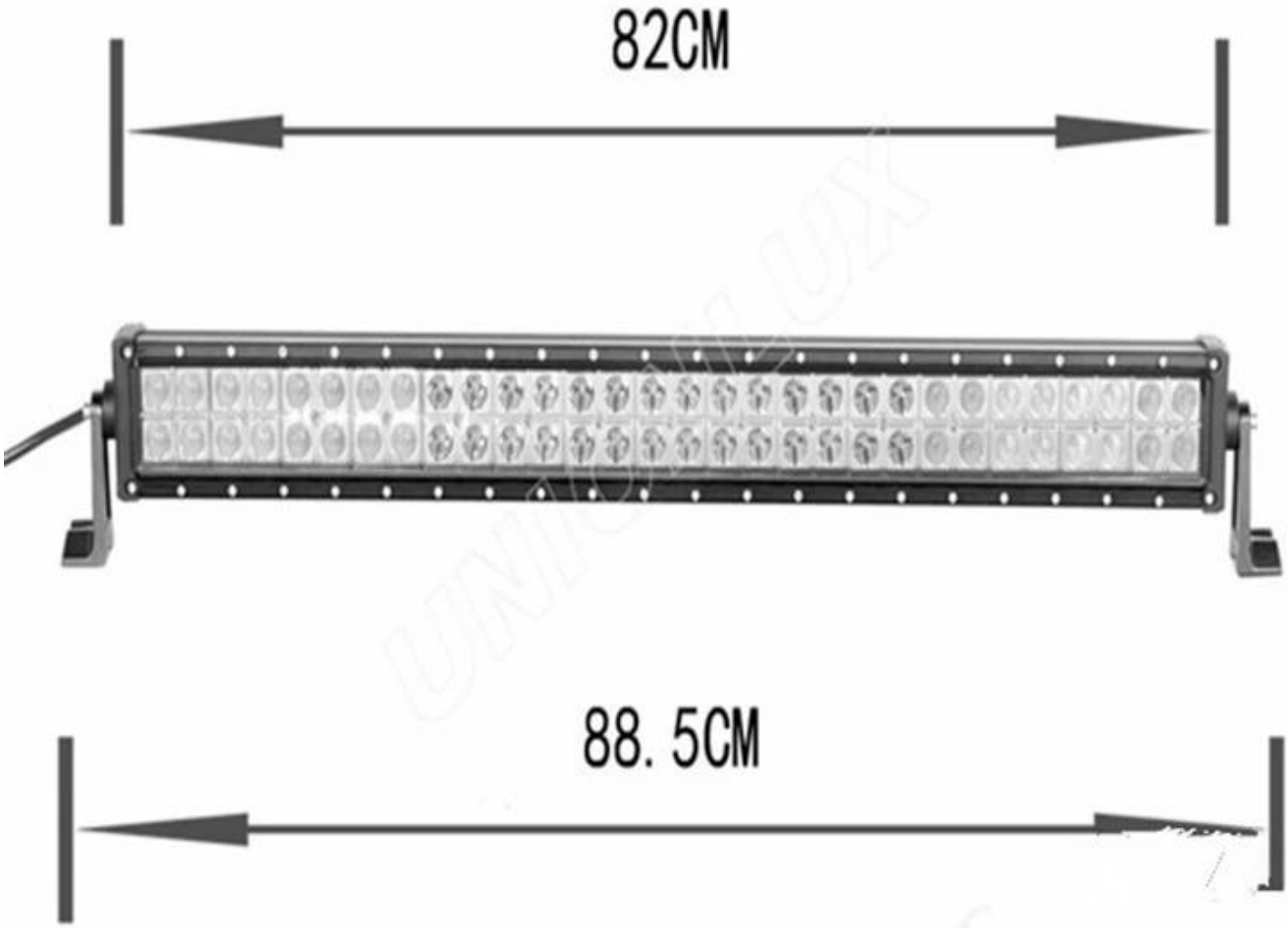

UNIONLUX

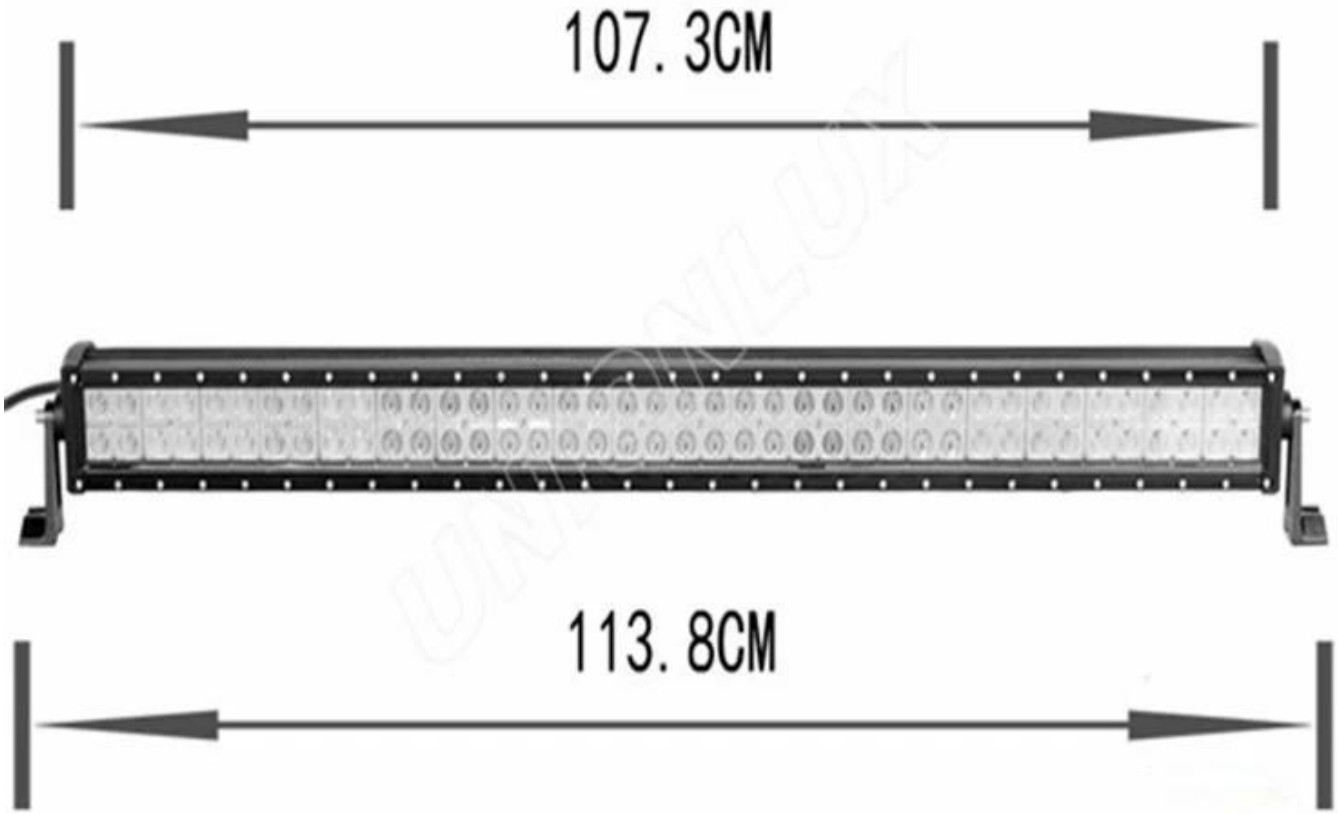

UNIONLUX

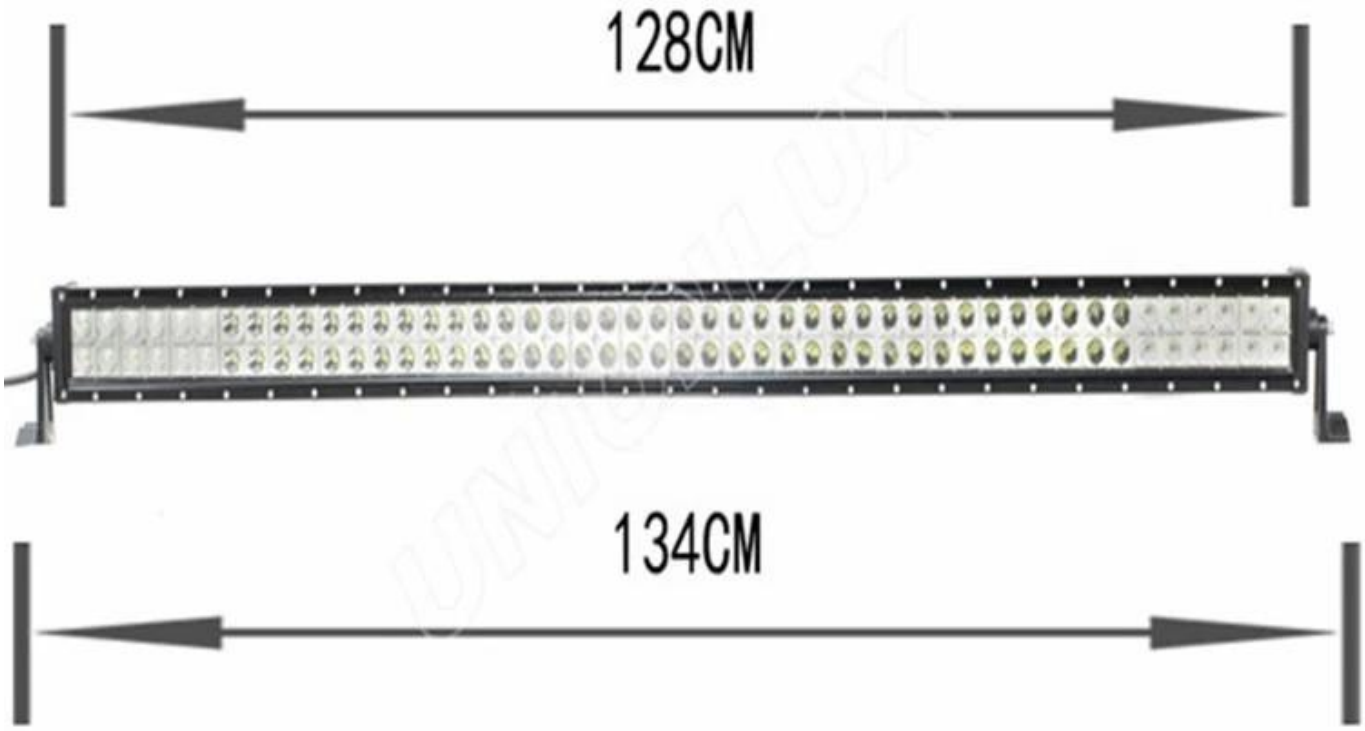

UNIONLUX

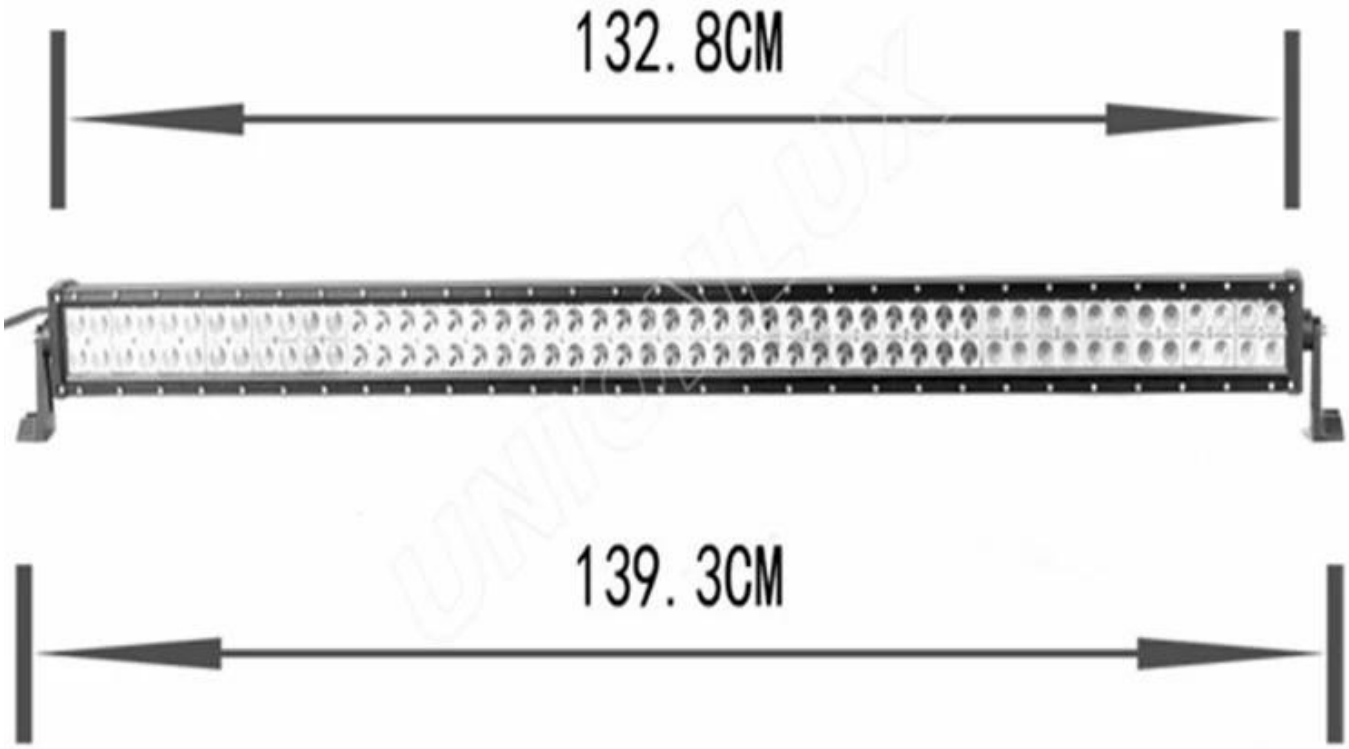

□□□□□□&□□

PACKAGE
SEAFREIGHT
PORTALAN
SHIPPING LOGISTICS INT'L TRANSPORT & FOREIGN TRADE CO. LTD.
ADAMAR
International Ship Supply Co
Spinnaker
Global Shipping Recruitment
Folk Shipping Co.
AIRFREIGHT
DHL
TNT
FedEx
Express
ups
EMS
PAYMENT
T/T
PayPal
WESTERN UNION
MONEY TRANSFER
CARGO

□□□□□□□□□

&□□□□□□□□□□□□□□□□□□□□□□□□□□
&□□□□□□□□□□□□□□□□□□□□□□□□
&□□
&□□□□□□□□□□□□□□□□□□□

□□□

GUANGZHOU UNIONLUX LIGHTING CO., LTD.
NO.38155
UNIONLUX
DUAL COLOR LED LIGHT BAR
OH MY GOD!

□□□□□□□

Q1□□□